TH-750 Series Steam or Boiler Water Fired Water Heater Operation & Maintenance Manual

READ THIS MANUAL COMPLETELY BEFORE ATTEMPTING START UP

P.O. Box 473639 • Charlotte, NC 28247
12249 Nations Ford Road • Pineville, North Carolina 28134
Phone 704.940.1228 • Fax 704.940.1227 • www.thermafloengineering.com

TH-750-IMI-REV-5

THERMAFLO ENGINEERING INCORPORATED Since 1986

Manufacturers Of Steam Fired Specialty Equipment

TH-750 Steam Fired Water Heater

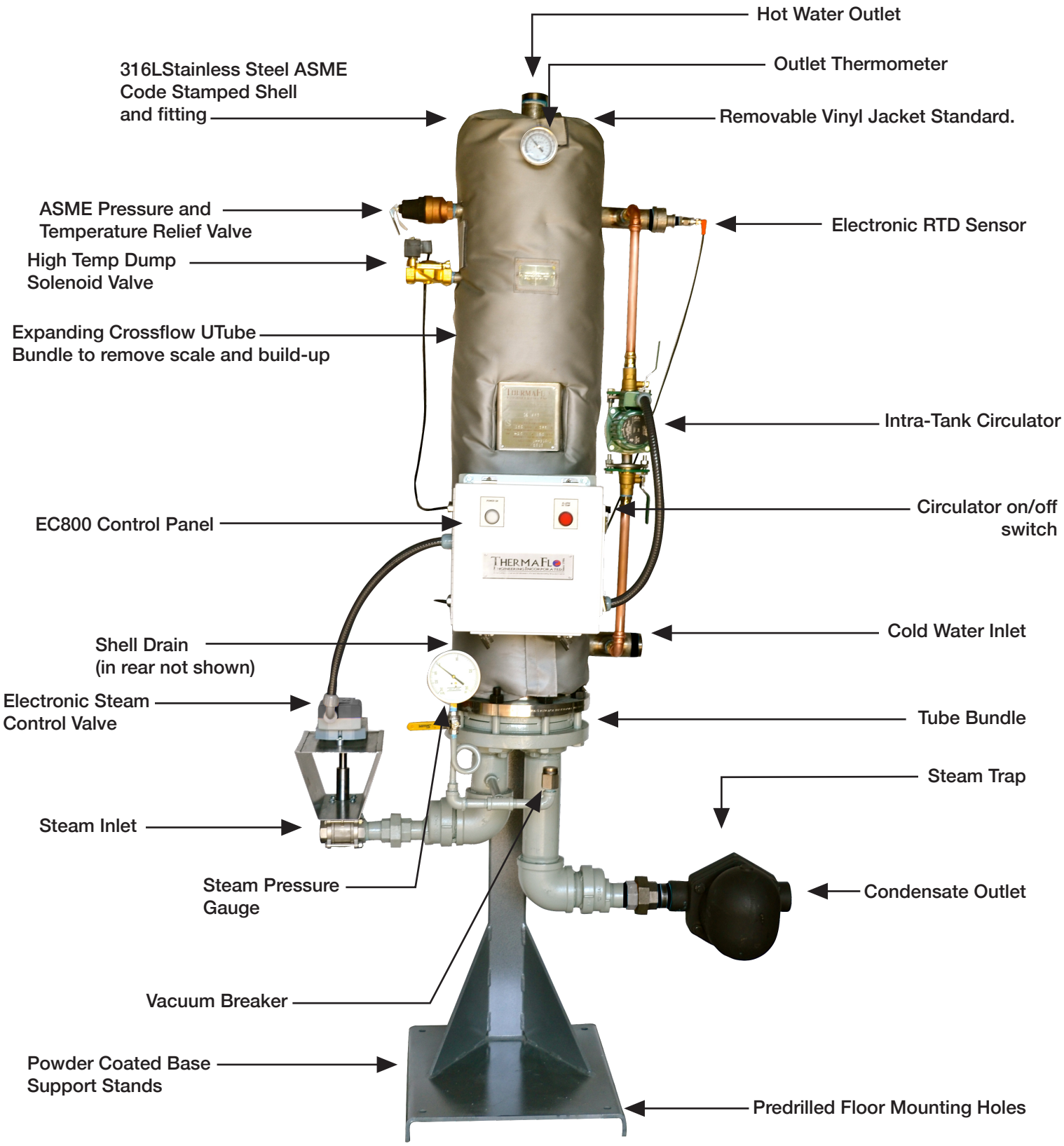

Electronic Version Shown

MADE IN USA PRODUCTS

Manufacturing Facilities: 12249 Nations Ford Road, Pineville, NC 28134

www.thermafloengineering.com

Section 1 – Hookup and Installation

1. The TH-750 should be located in an area so that it will be easily accessible for any inspection and repairs. Secure to the floor using the four mounting holes in the base floor stand.

2. Pipe clean water or fluid to be heated to the inlet on the lower side making provision for the loop recirculation. Install a check valve and suitable "Y" strainer on the inlet.

3. Pipe the heater outlet from the top of the TH-750 to the users. A recirculation loop for the hot circuit is recommended.

4. Service (isolation) valves should be located at all inlets and outlets.

5. Always open the cold side first and check for any leaks.
6. Pipe steam (125 psig Max) to the control inlet valve. If a "Y" strainer and drip steam trap were not supplied with the TH-750 heater, they should be installed with the isolation valve.

7. If a "Y" strainer and drip trap are not installed, dirt and condensate will build up on zero or low load conditions. **Failure to install a "Y" strainer and drip trap on the steam supply line voids the warranty.**

8. Be sure the steam supply is sized correctly – consult Thermaflo Engineering if you are unsure of the size.

9. Always open the cold (WATER) side first before opening the hot (STEAM) side and always introduce steam to the unit slowly.

10. For gravity return systems, the TH-750 will be supplied with a factory sized Float & Thermostatic steam trap. **Never substitute with another manufacturer's steam trap or a different trap other than that supplied with the TH-750V unit as this could effect operation and will void the warranty**. If the steam trap cannot be located at the time of installation, contact your local Thermaflo Engineering representative.

11. **For TH-750 units installed where the condensate drains into a gravity return system, the condensate piping must not be elevated or lifted as this will cause water hammer, erratic control, flooding of the tube steam space, premature tube failure and will void the warranty.**

12. For pressurized condensate return systems or where a lift is required, the TH-750 should be supplied and fitted with a Thermaflo Engineering pump trap on pressure powered pump in place of the F & T trap.

13. Pipe the high temperature dump valve shell drain valve P&T Valve to suitable drain. This valve will discharge a considerable amount of water when it opens. Never allow this valve to be piped to drain that will not carry full flow discharge. Installer is responsible for selecting adequate drain size. See drawing for details.

14. Always leave the vacuum breaker, located below the inlet steam pressure gauge, open to atmosphere.

15. The EC800 control panel requires a single-phase 120 V/60Hz power supply. Supply wiring connections are furnished so that only one simple connection is required. **Supply circuit should be fitted with a minimum 10 amp breaker with fused disconnect and should comply with local codes.**

16. **VERY IMPORTANT - Prior to connecting power to the unit, ensure that the re-circulation pump ON-OFF switch (black in color and located on the right side of the EC800 control panel) is in the OFF position to prevent the pump from running dry and damaging the seals which will consequently fail on start up. Evidence of the pump being run dry will void the warranty.**

17. The EC800 panel powers the re-circulation pump and all of the controls on the TH-750 unit. No additional wiring is required. Each TH-750 Digital Temperature Controller is "Factory Set-up and Tested" for the stated operating conditions. NO ADJUSTMENTS should be made unless the operating conditions have changed from conditions stated on the purchase order.

18. For TH-750 units supplied with a pneumatic steam control valve, connect a clean 40-psig Min (120 Max) air supply to the bottom supply port tubing connection. The outlet tubing to the control valve is supplied with the unit but is disconnected for shipping and will have to be reconnected during the installation process. Simple slide fittings allow easy connection of the poly air tubing. Units with electric or self acting actuation of the steam control valve require no outside air source.

19. Prior to startup, all head flange bolts should be retightened as these may have loosened during shipping or due to piping stress during installation. Bolts should be torqued incrementally and in the sequential order shown in the tables and drawings in Appendix A.

20. Retightening of head flange bolts is important and failure to complete this procedure can lead to head gasket leaks. The bolts should also be checked and adjusted as necessary after startup.

21. Included in Appendix B of this manual are drawings showing typical hookups for various applications. It is recommended that the drawing outlining the relevant application is carefully reviewed before startup is attempted. If you are uncertain about correct hookup contact your local Thermaflo Engineering representative or the factory.

22. As water expands when heat is applied, installation of a properly sized thermal expansion tank is recommended if the TH-750 does not have continuous usage. Failure to install an expansion tank may cause excessive popping of the relief valve and or high pressure which could cause damage to the tube bundle or shell.

23. **SAFETY NOTE:** The TH-750 is supplied as standard with a double safety shutdown system. However it is strongly recommended that when the TH-750 heater supplies hot water for domestic use, a secondary blending valve system be installed to prevent any chance of a scalding situation. Consult your engineering consultant or local Thermaflo Engineering representative if this is not in place.

YOU ARE NOW READY FOR STARTUP

Section 2 – Startup Procedure and Operation

1. Verify that all manual valves are closed on the water and heat (steam) sources.

2. Locate the black circulation pump On-Off switch (on side of EC800 panel) and make sure that it is in the OFF position. **Failure to turn the recirculation pump off will run the pump dry causing failure.**

3. Power up the panel. This will close the high temp drain solenoid valve and activate the temperature controller. **This valve is a normally closed valve.**

4. Slowly open the water supply valve to the shell of the TH-750 and allow the shell to fill with water (checking for leaks). Repair any leaks before proceeding with startup.

5. Open valves on the recirculation loop and when shell is full of water turn the recirculation pump ON.

6. With a small user turned on and calling for hot water (sink hot water faucet or shower), slowly open the hot water outlet valve. This will allow the shell to completely fill with water and remove any air from the shell. **Never use the Pressure & Temperature relief valve to remove air.**

7. The digital controller will sequence for a few minutes following initial power up and then return to its operation mode. The controller has been preset at the factory before shipment and should not require adjustment.

8. Two numbers will appear on the front of the controller. The lower number is the outlet water temperature set point. The upper number is the actual water temperature in the shell.

9. For TH-750 units with **pneumatic control**, ensure that the instrument air supply is connected and open to the panel.

10. The EC800 panel for pneumatic control includes a pressure gauge. This gauge indicates the air pressure to modulate the control valve.

11. When the system is first turned on, the water in the shell will be cold and controller will be sending out its maximum air signal to the control valve which will register 15 to 30 psig on the gauge.

12. As the system nears set point, the pressure will begin to drop until the gauge finally reads zero when set point temperature has been achieved.

13. As the system functions normally, the pressure reading on the gauge will rise and fall, modulating the steam valve.

EC800 Panel with Electronic Control

Circulation Pump Switch located here.

14. Fully open the condensate isolation valve to allow condensate to drain from the steam trap.

15. As the system nears set point, the pressure will begin to drop until the gauge finally reads zero when set point temperature has been achieved.

16. Very slowly open the inlet steam isolation valve to about 10% and allow steam to flow into the heater. The steam control valve will be 100% open at this point as the water in the shell is cold. Steam must be slowly introduced through the inlet valve at a controlled rate manually for warm up. The upper number on the controller will begin to increase as the steam is being introduced to the heating coil.

17. After about 10 minutes of warm up, slowly open fully the inlet steam isolation valve and allow the TH-750 to come up to full operating (set point) temperature. This may take several minutes. During this time the control valve will begin to take over and fully control.

18. Gradually close the hot water users (sink hot water faucet or shower) used for set up and allow the TH-750 to function in the automatic normal mode. It will take several minutes for a new system to settle down into a normal operating mode.

19. Often a new system will have no users on line demanding hot water. If this is the case, after the system reaches operating set point it will enter a hold mode. It is advisable for the owner

to open several users and let the system operate for 30-60 minutes before shutting down all hot water users.

20. Recheck the head bolt torque levels and repair any system leaks as required.

21. For TH-750 units with **electric control**, no instrument air supply is required. Otherwise the startup procedure is the same as for pneumatic control

22. The electric actuated valve is a “spring to close” electronic ball type valve with a soft Teflon seat that closes tight on shutdown.

EC800 Panel with Electric Control

23. The self acting (SA) version of the TH-750 will utilize the Thermaflo Engineering type 25 series valve.
A manual corresponding with the valve type supplied is included in the documentation package that accompanies the TH-750 heater.

24. The controller illustration below is a quick reference for startup use. A dedicated controller manual containing more detailed information is also included in the documentation package.

25. Note that all controllers, prior to shipment, are factory set for the operating parameters provided by the end user at time of order. Each controller is configured so that only the outlet temperature set point can be changed. All other critical control settings are locked out (password protected) to prevent inadvertent change or tampering by unauthorized personnel. **The default pass code is 0125.**

THIS CONTROLLER HAS BEEN SET UP SO THAT ONLY THE SETPOINT CAN BE CHANGED WITHOUT PASS CODE

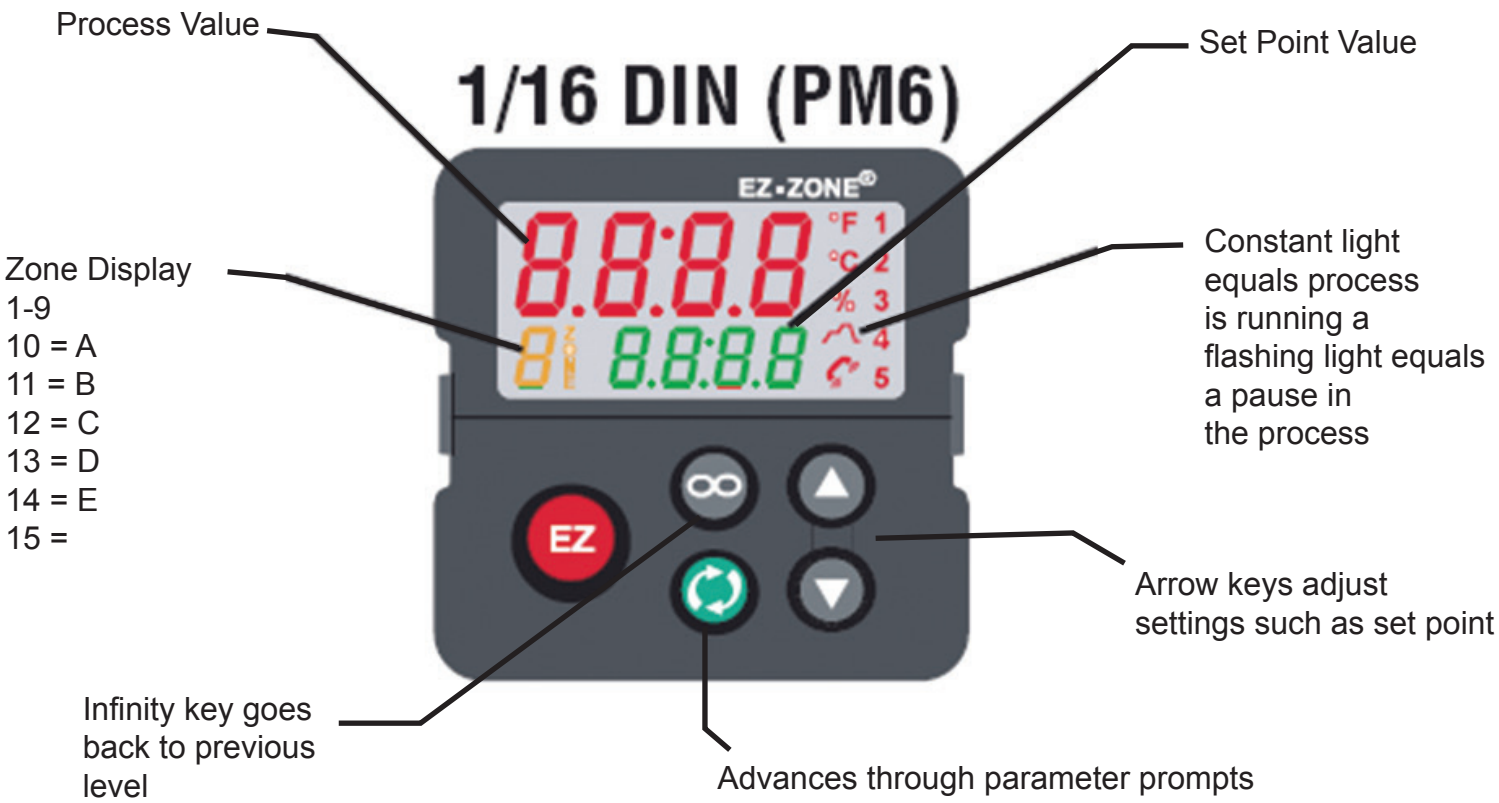

<u>SEE ELECTRICAL SCHEMATICS ON PAGES 19 - 26 OF THIS MANUAL</u>

Section 3 – Shutdown Procedure

1. Turn off all power to the circulating pump and / or electric controls, if so equipped.

2. Close all valves in the water inlet line (or boiler water / high temperature water line).

3. Relieve the pressure from the energy source line (water, boiler water, or high temperature water), where possible.

4. Close all remaining valves in the system in this order:
   a) Hot water outlet line
   b) Cold water inlet line
   c) Condensate return line (or boiler / high temperature water return line).

5. After the system has cooled, drain the unit by opening the tank drain valve and holding the pressure relief valve in the open position. This will prevent the formation of a vacuum and increase the drainage flow. Consider any freezing situation.

6. Proceed with required maintenance or repairs. For correct maintenance procedures see pages 9 – 12.

7. After performing the required maintenance or repairs, return the unit to operation by following the start up procedures detailed on pages 4 - 7.

Section 4 – Maintenance

1. Gasket creep is inherent to most gasketed joints, and retorquing is required. The greater the operating temperature and pressure, the greater the problem can become. It is imperative that the head bolts be torqued after installation, after initial setup, and inspected several times a year to be sure that the bolts are torqued correctly and there are no leaks. See section 1 paragraph 19 for correct torque procedure.

2. Located at the lower rear of the unit, the TH-750 has a manual, shell blow down valve that should be piped to a suitable drain. On a monthly to quarterly frequency, this valve should be quickly opened for 2 seconds to remove scale buildup and any normal sediment that may collect in the shell.

3. The intra-tank circulation pump is critical for the accurate operation of the TH-750. This pump circulates the water in the shell across the temperature sensor and back into the shell through the cold water supply inlet. This action allows the system to not only detect changes in flow demand, but also temperature changes as well. The recirculation pump is fitted with permanently lubricated bearings and therefore does not require any additional lubrication. If however the TH-750 suddenly becomes unable to maintain accurate control, the pump should be checked for operation.

4. On a yearly basis, the operation of the recirculation pump should be verified, and isolation valves have been fitted on each side of the pump for this service. If the pump is not running, make sure the pump ON-OFF switch (black in color and located on the right side of the EC800 control panel) is in the <u>ON</u> position.

5. If the recirculation pump requires replacement, turn the pump ON-OFF switch to the <u>OFF</u> position, isolate pump and remove.

6. Install new pump, open isolation valves and turn pump ON-Off switch to the <u>ON</u> position. This can be done while the TH-750 heater remains in service so that hot water flow to end users is not interrupted.

7. All TH-750 units must be fitted with a steam drip trap station (trap and strainer) at the steam inlet before the control valve. The satisfactory operation of this trap is critical. On at least a quarterly basis, this trap should be checked for condition and operation and the strainer should be blown down to clean.

8. On a yearly basis it is good practice to operate each valve on the TH-750 unit to ensure all valves operate and shut off as required.

9. Each TH-750 heater is fitted with a pressure gauge and steam siphon. At least once a year the operation of this gauge should be verified by closing off the steam inlet valve and making sure the gauge registers zero. If it does not, the accuracy may be off and it should be replaced.

10. Each TH-750 heater is fitted with a pressure and temperature relief valve. Scale from hard water can build up on the element and cause the valve to malfunction. We recommend that this valve be replaced every two years to make sure operation is verified. A record of the

replacement schedule should be kept and adhered to by the operator/owner. **THIS IS VERY IMPORTANT.**

11. TH-750 heaters are engineered and constructed to last for many years when the supply steam is of good quality, the feedwater has been softened and the condensate is removed correctly

12. The internal U type heating coil commonly referred to as the heating bundle is very important to the overall operation of the TH-750. Every 2 years of operation, this bundle should be removed and cleaned so that effective heat transfer can continue to take place.

13. Tube bundle removal procedure is as follows:

14. When removing tube bundle there are two gaskets that will need to be replaced with new. These gaskets are located: one between the tube face of the coil and the flange welded to the tank, and one with a divider to fit between the head and the tube sheet.

15. **SAFETY NOTE:** Water, boiler water, or high temperature water present situations that can be very dangerous because of the high temperatures and pressures. To avoid possible injury or death, use common sense and follow all accepted and recommended procedures when performing installation, operation, and maintenance procedures. **Caution!** The combination of electricity and water can pose a **very dangerous situation**. Turn off and disconnect all power before attempting any maintenance procedures.

16. Follow Steps 1 through 7 of the shutdown procedures (page 8) to take the unit offline before attempting to remove and inspect the heat exchanger coil.

17. Assure that the energy source, condensate / water return line, cold water inlet, and hot water outlet have been shut off; that the tank has been completely drained; that the pressure has been bled from both the water and energy source system; and that the water, all components, and surfaces have cooled.

18. Carefully break the joint between the heat exchanger coil head and the small line leading to the energy source pressure gauge.

19. Carefully break the connections between the heat exchanger coil head and the energy source inlet and outlet lines. **Note: It may be necessary to break the lines at a second location, and for the lines to be rotated to allow clearance for the heat exchanger coil to be removed from the tank. If it is necessary, care should be taken to insure that in-line components are not damaged.**

20. Break the bolts loose that secure the heat exchanger coil head to the tank. After all bolts have been broken loose, remove them from the unit.

21. Carefully separate the heat exchanger coil head from the mounting flange and remove the coil assembly from the tank. **Caution!** There may still be residual water condensate (or boiler/high temperature water) in the coil that can run out during removal of the coil from the tank. If sufficient time has not been allowed for cooling, this residual condensate/water could present **a danger of injury.**

22. Examine the heat exchanger coil for scale buildup and signs of leakage. If no leakage is detected, carefully clean any excess scale from the coils and prepare the heat exchanger coil for installation. If leakage is detected between the coils and water in the tank, either repair the leaking coil(s) or replace the heat exchanger coil.

23. Remove the old gaskets and completely clean the mating surfaces. Install the two (2) new gaskets: one (1) between the tube face of the coil and the flange welded to the tank, and one (1) gasket with a divider to fit between the heat and the tube sheet.

24. Carefully insert the heat exchanger coil into the tank. The coil should be installed so that the divider in the head lines up with the coil, and that the divider is parallel to the horizon.

25. After assuring that the heat exchanger unit is correctly aligned, clamp the flanges together and proceed with the torque procedures detailed below.

    Note: Bolts used to secure the heat exchanger unit in the TH-750V Heaters are rated as B7. Grade B7 bolts are designated by B7 on the head.

    a. Lubricate the bolt threads and the nut faces with a suitable lubricant.

    b. Insert the bolts through the flanges, and then start and finger tighten the nuts.

    c. Number all bolts so that torque requirements can be followed.

    d. Apply torque in three steps of 60%, 80% then 100% of required final torque, loading all bolts at each step before proceeding to the next step.

    Note: Appendix A contains tables listing ANSI approved target torques for Grade B7 bolts. The correct target torque can be determined by the nominal pipe size, number and grade of bolts used to secure the flange, and the size of the bolt used. Be sure of the bolt grade used in the unit.
    When replacing bolts, be sure to use the same type of bolt and corresponding nuts. Grade B7 bolts can be used in all cases.

    e. Tighten bolts in the applicable sequential order (0º- 180°, 90°- 270°, 45°- 225°, 135°-315° etc.) at each step until final target torque is reached (see applicable diagram contained in Appendix A).

    f. Use rotational tightening until all bolts are stable at final torque level. Two (2) complete times around is usually required.

    Note: Appendix A contains drawings depicting the typical flange configurations (number of bolts, location, tightening sequence, etc.) for the TH-750 Heater. Reference the applicable drawing for the unit being serviced.

26. Reconnect the energy source inlet and outlet lines to the heat exchanger coil. If these lines were broken at an additional location to allow for removal of the coil, be sure to also tighten those connections. Follow recommendations contained in the manufacturer's documentation,

local codes, or accepted contractor practices as to the use and/or type of joint compound or sealer at the connections.

27. Reconnect the small line leading to the energy source pressure gauge.

28. If the unit is equipped with a circulating pump, the pump relay **must be interlocked with the temperature control valve** so that the energy source will shut off if the pump is not operational. Failure to do so could create a **very dangerous situation** if the pump were to fail.

29. Follow the startup procedures (page 5) to put the unit back online. Carefully check all connections for any sign of leakage.

Cleaning Procedure:

On an annual basis when using extremely hard water the inner bundle will need cleaning to remove lime and scale deposits. This is simply done by draining the unit and following these steps:

1. Close the outlet isolation valve to the domestic system and turn off recirculation pump.

2. Close the inlet isolation vales to the heater domestic supply and loop recirculation. This will totally isolate the shell.

3. Remove the top thermometer from the shell. The connection will be a ¾" and is located at the very top of the shell.

4. Than using a small flexible funnel completely fill the shell with "DD518" biodegradable descaling fluid (approx. 4 gallons) for a 10" unit, and install the thermometer. Wear protective eye wear and gloves.

5. With the unit full turn on the recirculation pump for 2 hours. Do not operate over 2 hours. Open lower drain valve and drain the shell of the fluid as the fluid is biodegradable and can be sent to the drain.

6. After the shell is drained fill with cold domestic water twice and flush. The system is now ready for use.

APPENDIX A

Garlock Bolt Torque Values
B7 Bolts

.062" Ring Gaskets **ANSI – 150# Flanges**

Nominal Pipe Size (IN)	Number of Bolts	Size of Bolts (IN)	Grade A Target Torque (FT - LBS)
2"	4	5/8"	120
2 1/2"	4	5/8"	120
3"	4	5/8"	120
4"	8	5/8"	120
5"	8	3/4"	200
6"	8	3/4"	200
8"	8	3/4"	200
10"	12	7/8"	320
12"	12	7/8"	320
14"	12	1"	490
16"	16	1"	490
18"	16	1 1/8"	710
20"	20	1 1/8"	710
24"	20	1 ¼"	1000

Garlock Bolt Torque Values
B7 Bolts

.062" Ring Gaskets **ANSI – 300# Flanges**

Nominal Pipe Size (IN)	Number of Bolts	Size of Bolts (IN)	Grade 5 Target Torque (FT - LBS)
2"	8	5/8"	120
2 1/2"	8	3/4"	200
3"	8	3/4"	200
4"	8	3/4"	200
5"	8	3/4"	200
6"	12	3/4"	200
8"	12	7/8"	320
10"	16	1"	490
12"	16	1 1/8"	710
14"	20	1 1/8"	710
16"	20	1 1/4"	1000
18"	24	1 ¼"	1000
20"	24	1 ¼"	1000
24"	24	1 ½"	1600

APPENDIX A

Bolt Torque Procedure

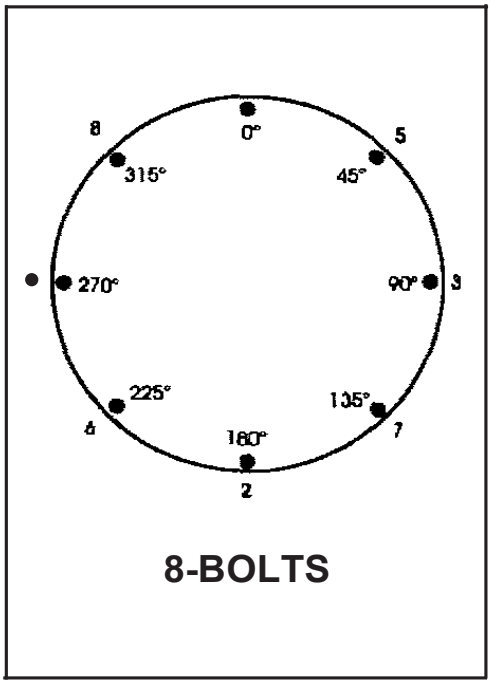

SEQUENCIAL ORDER	ROTATIONAL ORDER
1 - 2	1
3-4	5
5-6	3
7-8	7
	2
	6
	4
	8

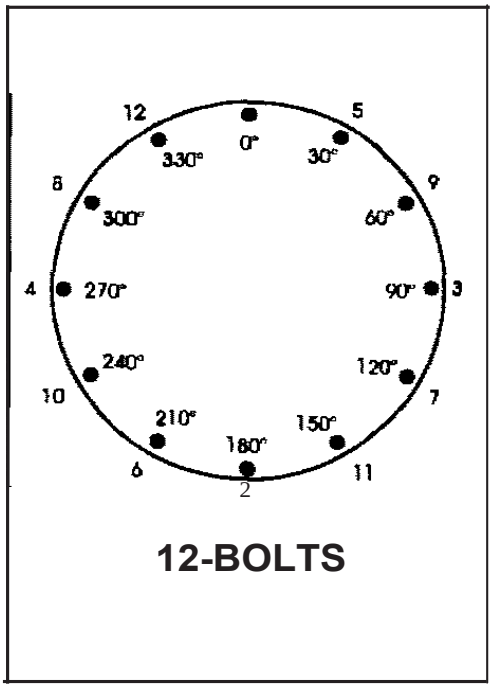

SEQUENCIAL ORDER	ROTATIONAL ORDER
1 - 2	1
3-4	5
5-6	9
7- 8	3
9 - 10	7
11 - 12	11
	2
	6
	10
	4
	8
	12

APPENDIX A

Bolt Torque Procedure

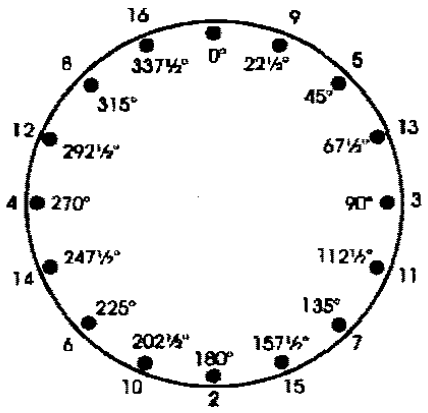

16-BOLTS

SEQUENCIAL ORDER	ROTATIONAL ORDER
1 - 2	1
3 – 4	9
5 - 6	5
7 - 8	13
9 - 10	3
11 - 12	11
13 - 14	7
15 - 16	15
	2
	10
	6
	14
	4
	12
	8
	16

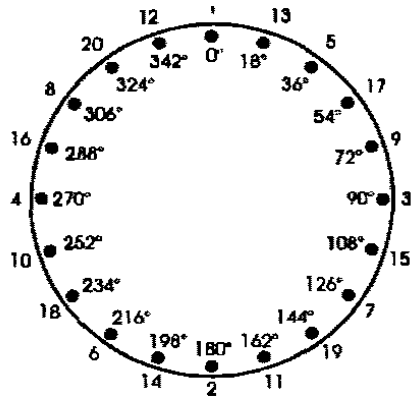

20-BOLTS

SEQUENCIAL ORDER	ROTATIONAL ORDER
1 - 2	1
3 – 4	13
5 - 6	5
7 - 8	17
9 - 10	9
11 - 12	3
13 - 14	15
15 - 16	7
17 - 18	19
19 - 20	11
	2
	14
	6
	18
	10
	4
	16
	8
	20
	12

APPENDIX B

TH-750 Steam Fired Single Unit Piping Hookup

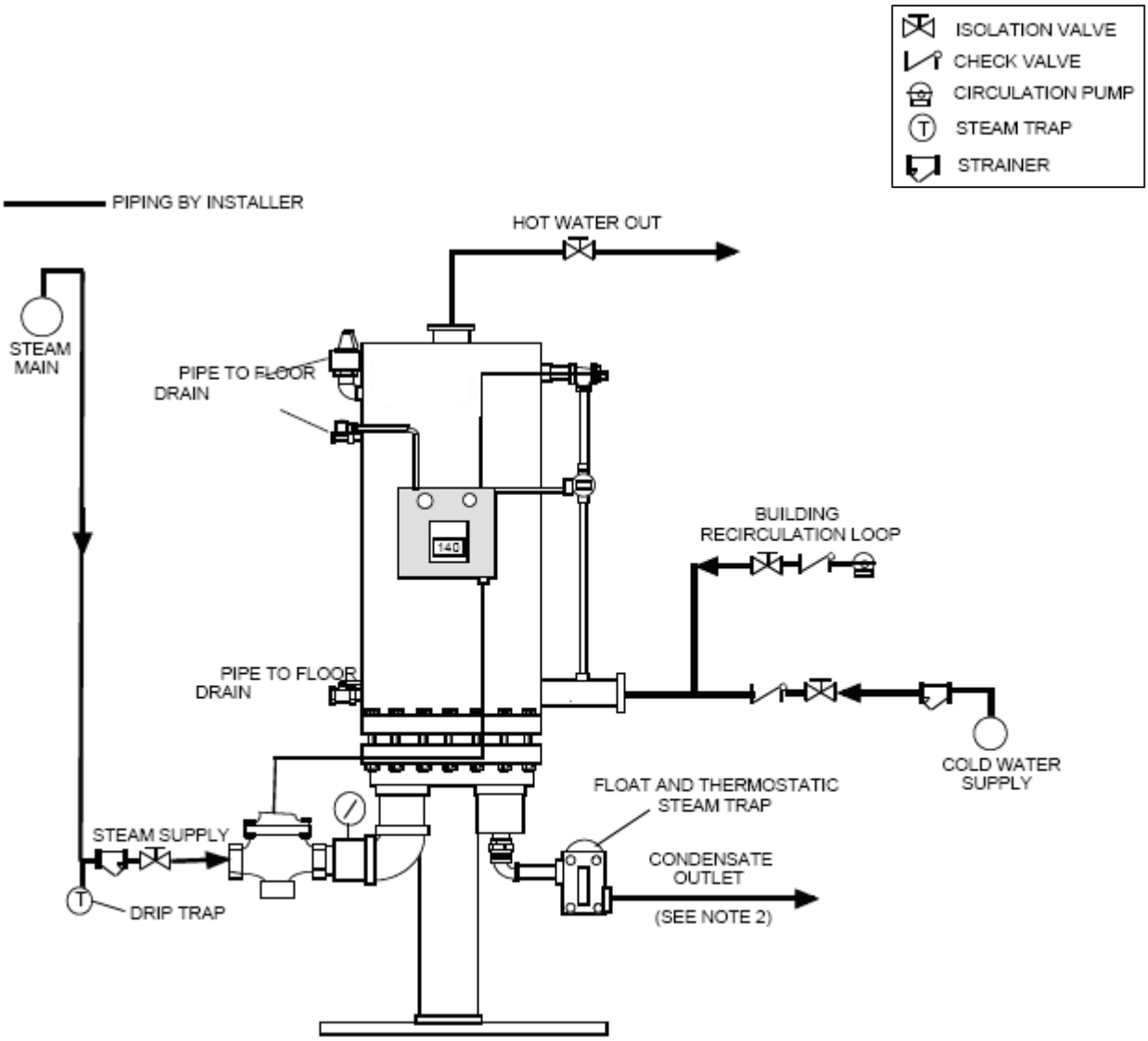

Notes:

1. Suggested piping design. Designer should consult local codes to verify compliance.
2. Hookup shown with Float & Thermostatic steam trap piped to gravity atmospheric condensate return line. For pressurized condensate return systems or where a lift is required, the TH-750 must be fitted with a Thermaflo Engineering pump trap on pressure powered pump in place of the F & T Trap.
3. Always pipe supply steam from the top of the header as shown and install a main drip before the control valve inlet.
4. When using the TH-750 for domestic hot water supply, it is highly recommended to install a master blend valve to prevent any chance of scalding

APPENDIX B

TH-750 Steam Fired Single Unit Piping Hookup With Storage Tank For Peak Use

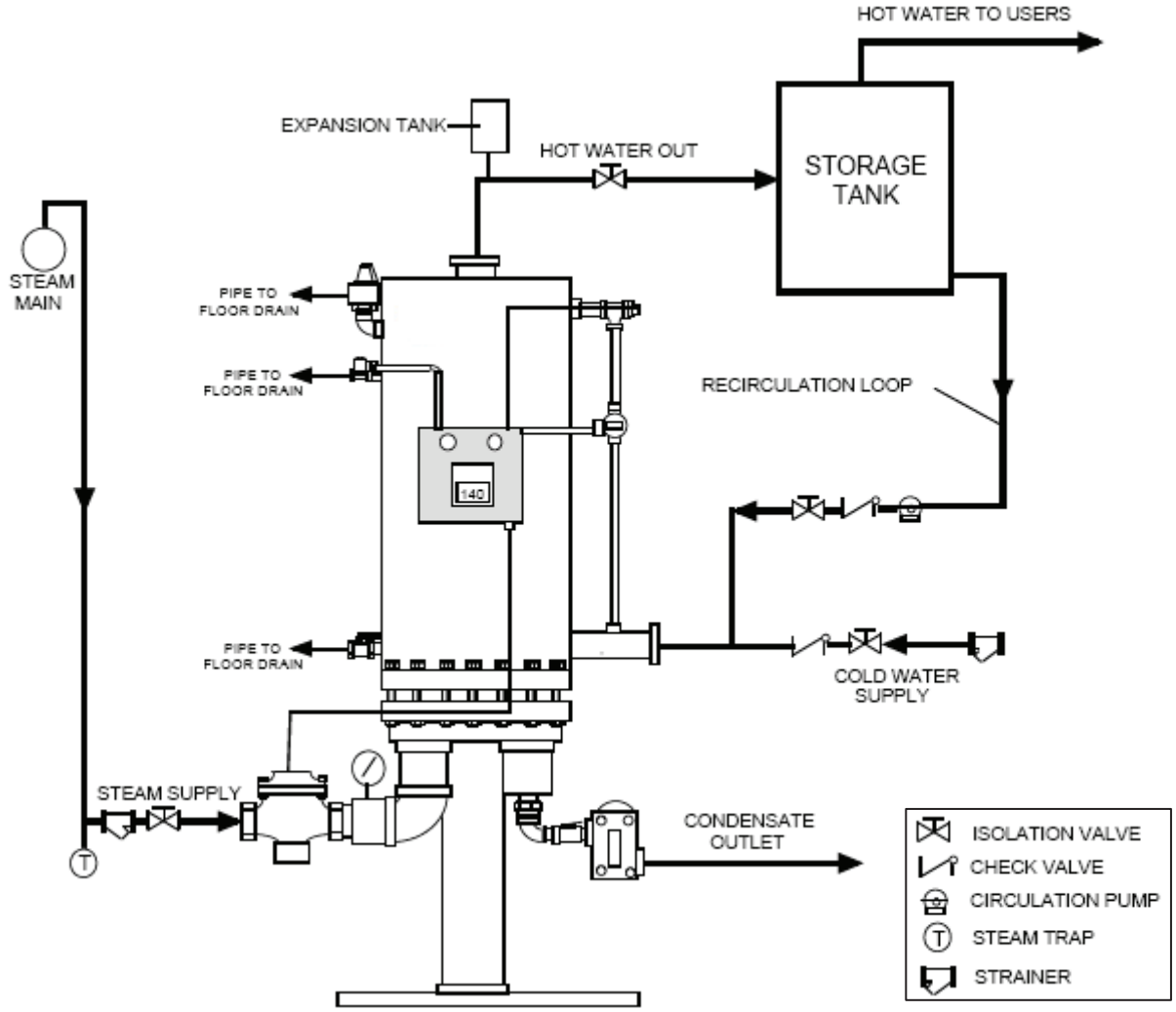

Notes:

1. Suggested piping design. Designer should consult local codes to verify compliance.
2. Hookup shown with Float & Thermostatic steam trap piped to gravity atmospheric condensate return line. For pressurized condensate return systems or where a lift is required, the TH-750 must be fitted with a Thermaflo Engineering pump trap in place of the F & T trap.

3. Always pipe supply steam from the top of the header as shown and install a main drip before the control valve inlet.
4. When using the TH-750 for domestic hot water supply, it is highly recommended to install a master blend valve to prevent any chance of scalding.

APPENDIX B

TH-750 Steam Fired Single Unit Piping Hookup

With Blend Valve & Thermal Loop Diverter

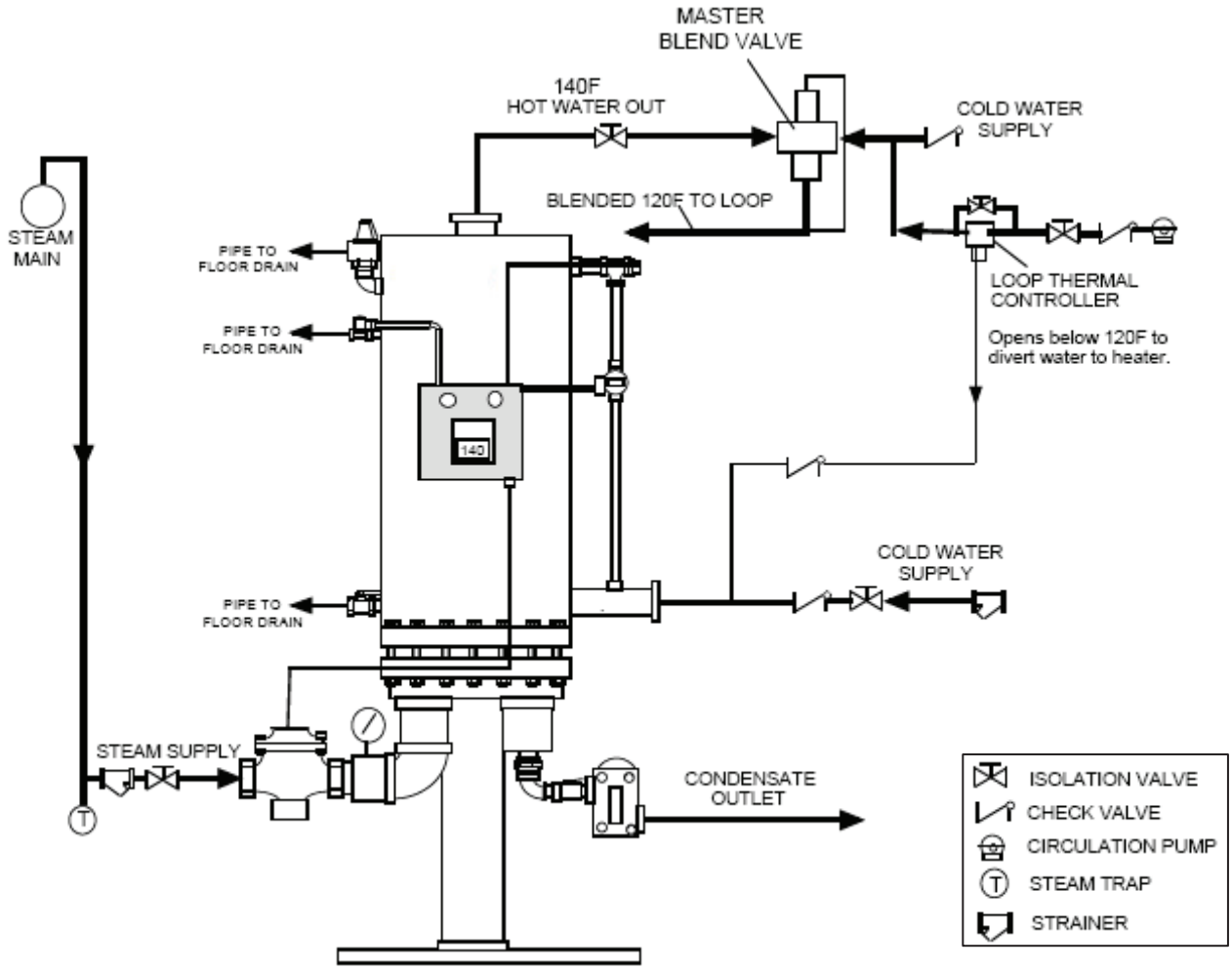

Notes:

1. Suggested piping design. Designer should consult local codes to verify compliance.
2. Hookup shown with Float & Thermostatic steam trap piped to gravity atmospheric condensate return line. For pressurized condensate return systems or where a lift is required, the TH-750 must be fitted with a Thermaflo Engineering pump trap in place of the F & T trap.

3. Always pipe supply steam from the top of the header as shown and install a main drip before the control valve inlet.
4. When using the TH-750 for domestic hot water supply, it is highly recommended to install a master blend valve to prevent any chance of scalding.

THERMAFLO
ENGINEERING COMPANY

Electric Temperature

&

Pump Control Panel

MODEL: EC-800-EN-PM6

ELECTRICAL SCHEMATICS

THERMAFLO ENGINEERING COMPANY Since 1986 MANUFACTURERS of STEAM FIRED SPECIALTY EQUIPMENT			CHK'D BY AS	TITLE ThermaFlo Engineering Co.		
			DRAWN BY MWB	SUB TITLE Electrical Temp. & Pump Control Panel		
DO NOT SCALE DRAWING	FILE NAME S04657-1.dwg DRAWING TYPE ELECTRICAL SCHEMATICS	DATE ISSUED 06/06/2011	SCALE N.T.S.	DRAWING NUMBER S04657-1	REV 0	SHEET TITLE

SYMBOLS LEGEND:

RTD — RESISTANCE TEMPERATURE DEVICE

TERMINAL BLOCK

SOLENOID VALVE

PILOT LIGHT

CR-1 — CONTROL RELAY

MTR — PUMP MOTOR

NORMALLY OPEN CONTACT

NORMALLY CLOSED CONTACT

PRESSURE SWITCH NORMALLY OPEN CONTACT

FU1 — FUSE

WIRED BY OTHERS (EXTERNAL TO PANEL)

PANEL WIRING

WIRING CONNECTION

NOTES:

1. Panel wiring to be 18 AWG
   Field wiring to be 14 GA THHN or larger.

2. Wire numbers are the same as terminal numbers except where noted.

3. Controller to be programmed such that the Alarm Switch opens on High Temperature.

THERMAFLO ENGINEERING COMPANY Since 1986 — MANUFACTURERS of STEAM FIRED SPECIALTY EQUIPMENT		CHK'D BY: AS	TITLE: ThermaFlo Engineering Co.		
		DRAWN BY: MWB	SUBTITLE: Electrical Temp. & Pump Control Panel		
DO NOT SCALE DRAWING	FILE NAME: S04657-2.dwg	DATE ISSUED: 06/06/2011	SCALE: N.T.S.	DRAWING NUMBER: S04657-2	REV: 0 / SHEET: SYMB
	DRAWING TYPE: ELECTRICAL SCHEMATICS				

WARNING: To reduce risk of fire, replace only with the below listed fuses or their Equivalents.
Fuse F1: MDL-7 - 7 amp

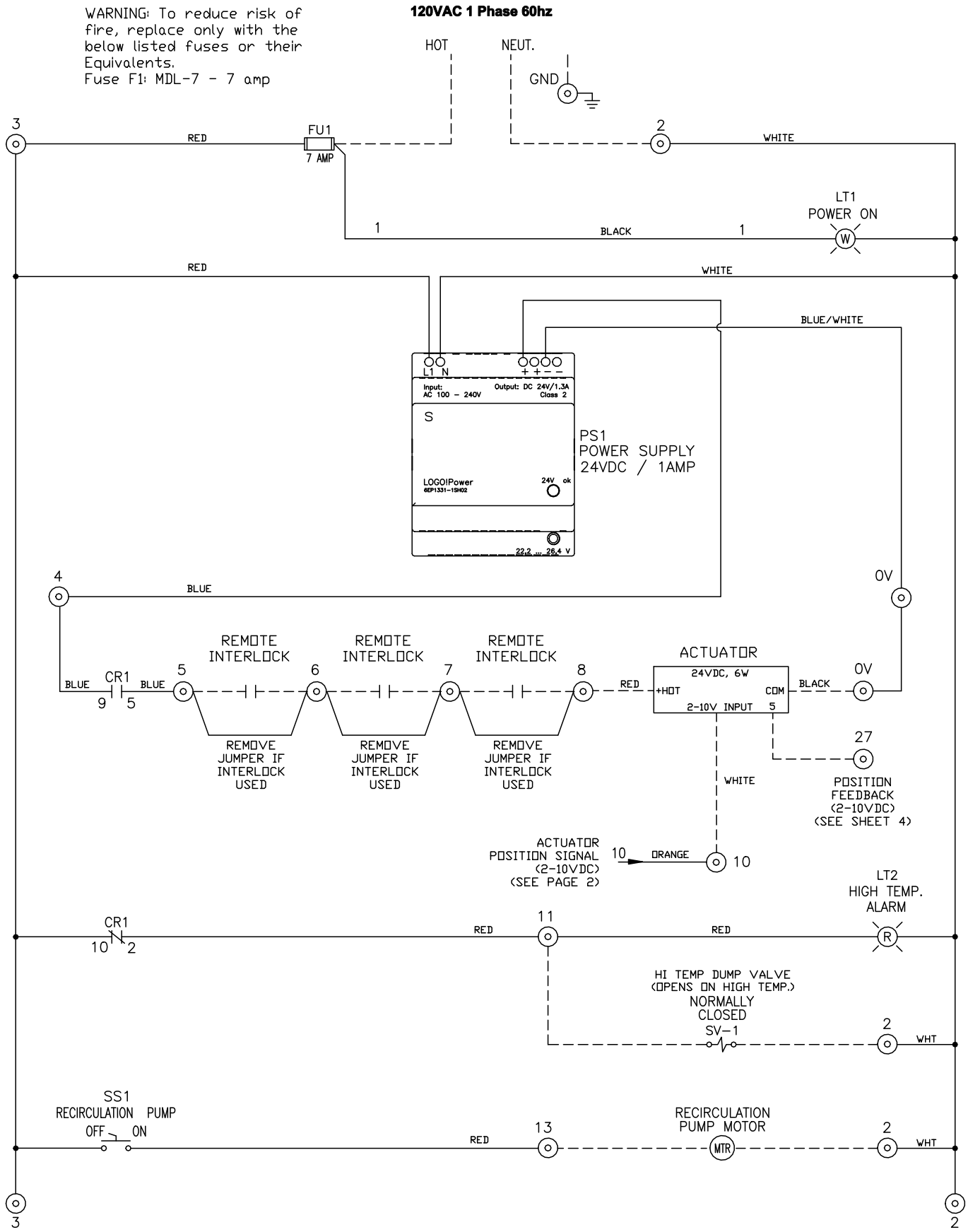

THERMAFLO ENGINEERING COMPANY Since 1986 MANUFACTURERS of STEAM FIRED SPECIALTY EQUIPMENT	CHK'D BY **AS**	TITLE **ThermaFlo Engineering Co.**	
	DRAWN BY **MWB**	SUBTITLE **Electrical Temp. & Pump Control Panel**	
DO NOT SCALE DRAWING	FILE NAME S04657-3.dwg DRAWING TYPE ELECTRICAL SCHEMATICS	DATE ISSUED **06/06/2011**	SCALE **N.T.S.**
		DRAWING NUMBER **S04657-3**	REV **0**
			SHEET 3

WATLOW CONTROLLER PM6C1FJ-1RFAAAA

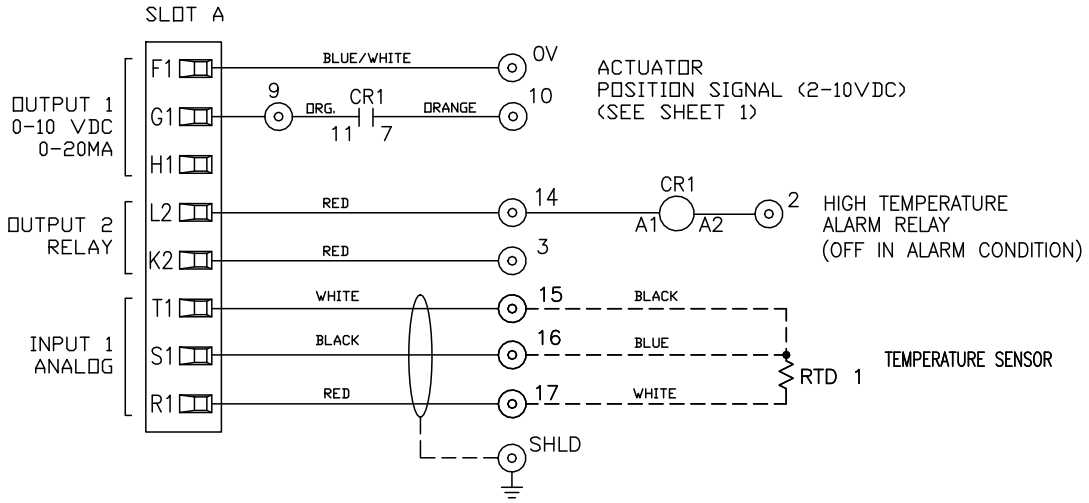

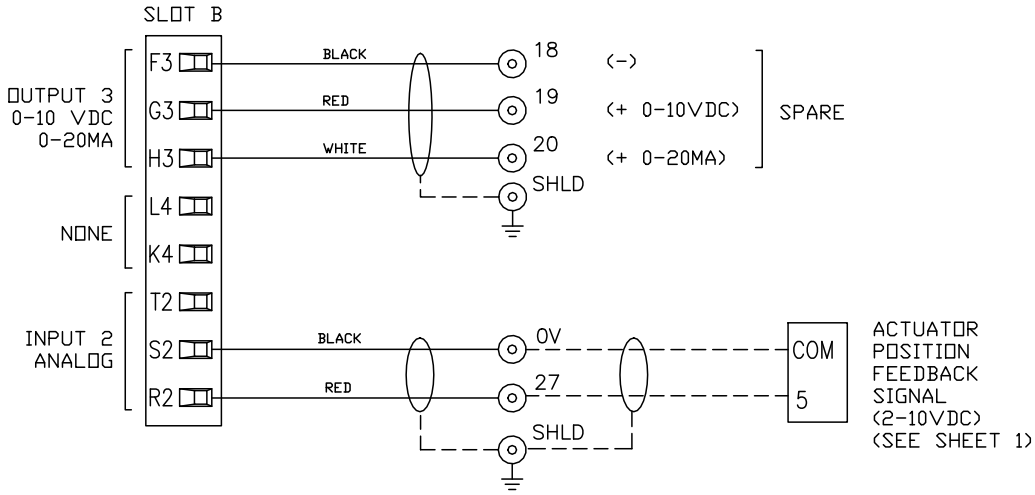

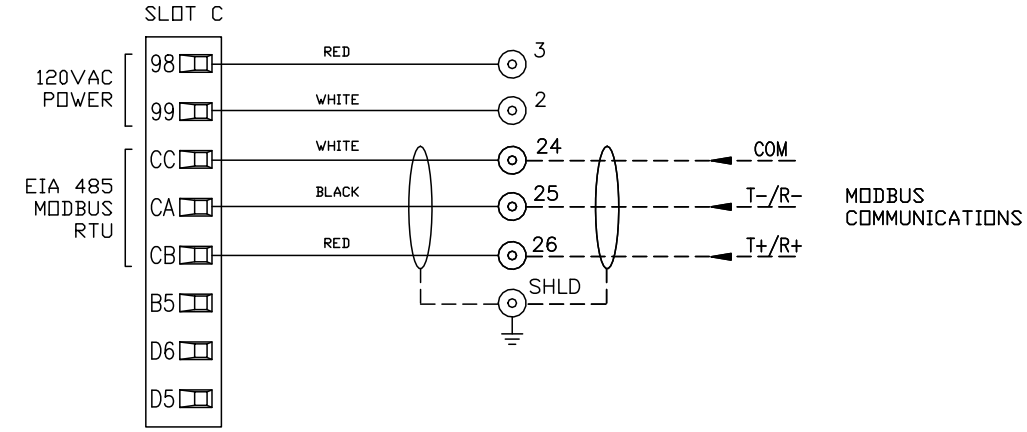

WATLOW
CONTROLLER
SLOT LOCATIONS

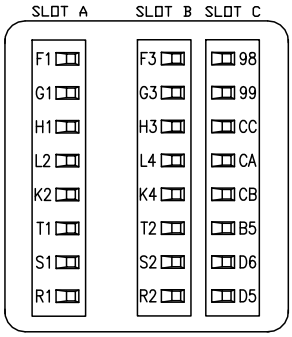

THERMAFLO ENGINEERING COMPANY Since 1986 MANUFACTURERS of STEAM FIRED SPECIALTY EQUIPMENT	CHK'D BY **AS**	TITLE **ThermaFlo Engineering Co.**	
	DRAWN BY **MWB**	SUBTITLE **Electrical Temp. & Pump Control Panel**	
DO NOT SCALE DRAWING	FILE NAME S04657-4.dwg DRAWING TYPE ELECTRICAL SCHEMATICS	DATE ISSUED **06/06/2011**	SCALE **N.T.S.**
	DRAWING NUMBER **S04657-4**	REV **0**	SHEET 4

WATLOW CONTROLLER PM6C1FJ-1RFAAAA
PIN DESCRIPTIONS

SLOT A

OUTPUT 1 0-10 VDC 0-20MA	F1	VOLTS- / CURRENT-
	G1	VOLTS+
	H1	CURRENT+
OUTPUT 2 RELAY	L2	NORMALLY OPEN
	K2	COMMON
INPUT 1 ANALOG	T1	RTD+ / CURRENT +
	S1	RTD- / CURRENT- / VOLTS-
	R1	RTD+ / THERMOCOUPLE+ / VOLTS+

SLOT B

OUTPUT 3 0-10 VDC 0-20MA	F3	VOLTS- / CURRENT-
	G3	VOLTS+
	H3	CURRENT+
NONE	L4	
	K4	
INPUT 2 ANALOG	T2	RTD+ / CURRENT +
	S2	RTD- / CURRENT- / VOLTS-
	R2	RTD+ / THERMOCOUPLE+ / VOLTS+

SLOT C

120VAC POWER	98	POWER - 120VAC HOT
	99	POWER - 120VAC NEUTRAL
EIA 485 MODBUS RTU	CC	COMMON
	CA	T-/R-
	CB	T+/R+
	B5	
	D6	
	D5	

WATLOW CONTROLLER SLOT LOCATIONS

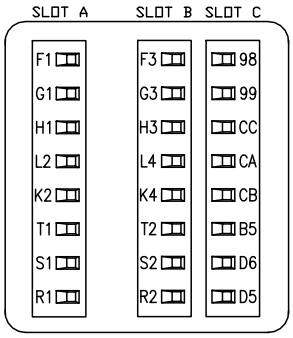

THERMAFLO ENGINEERING COMPANY Since 1986

MANUFACTURERS of STEAM FIRED SPECIALTY EQUIPMENT

DO NOT SCALE DRAWING

FILE NAME S04657-5.dwg	DATE ISSUED	CHK'D BY AS	TITLE ThermaFlo Engineering Co.		
DRAWING TYPE ELECTRICAL SCHEMATICS	06/06/2011	DRAWN BY MWB	SUBTITLE Electrical Temp. & Pump Control Panel		
		SCALE N.T.S.	DRAWING NUMBER S04657-5	REV 0	SHEET 5

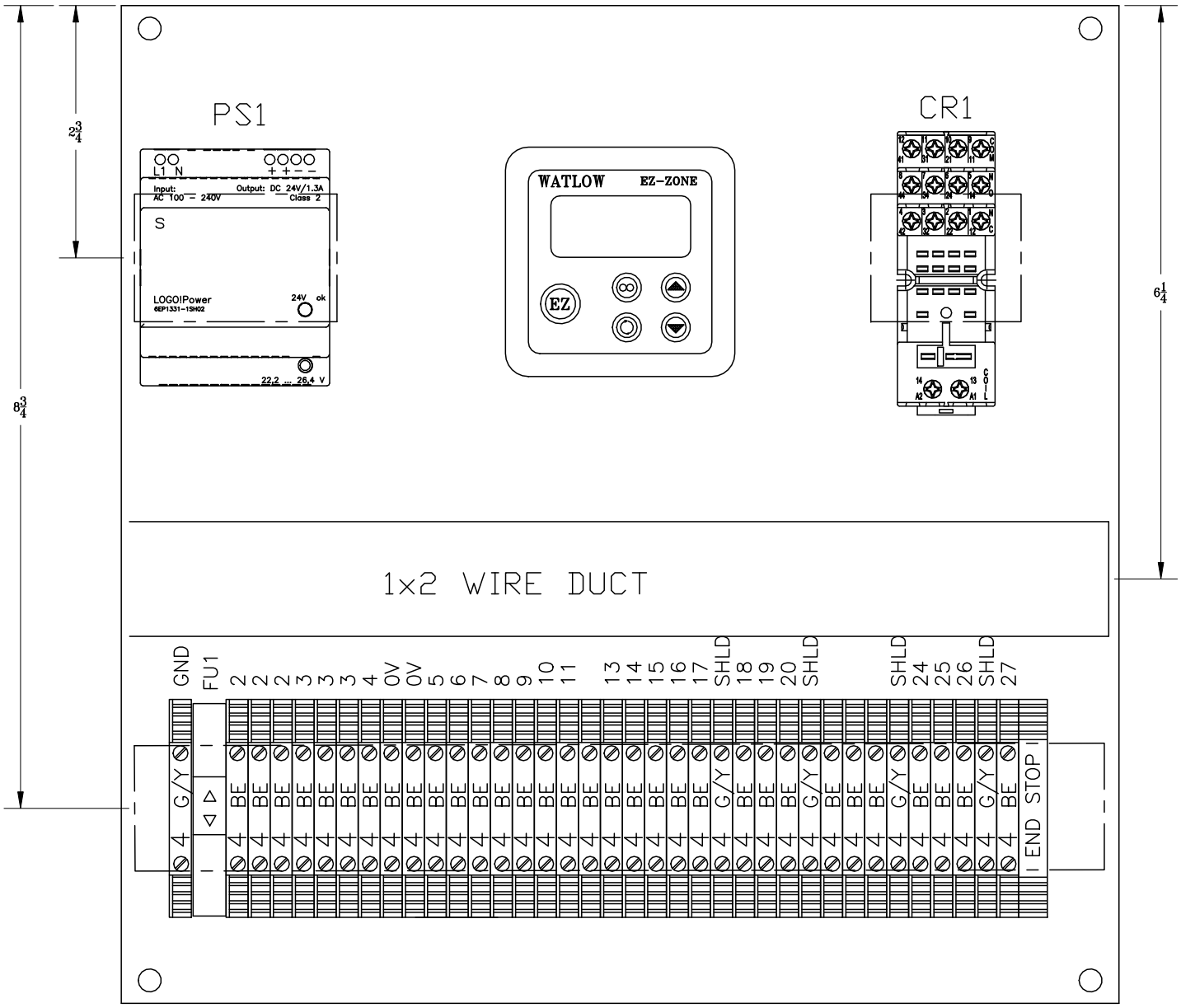

THERMAFLO ENGINEERING COMPANY Since 1986 MANUFACTURERS of STEAM FIRED SPECIALTY EQUIPMENT		CHK'D BY **AS**	TITLE **ThermaFlo Engineering Co.**		
		DRAWN BY **MWB**	SUBTITLE **Electrical Temp. & Pump Control Panel**		
DO NOT SCALE DRAWING	FILE NAME S04657-6.dwg DRAWING TYPE ELECTRICAL SCHEMATICS	DATE ISSUED **06/06/2011**	SCALE **N.T.S.**	DRAWING NUMBER **S04657-6**	REV **0** / SHEET 6

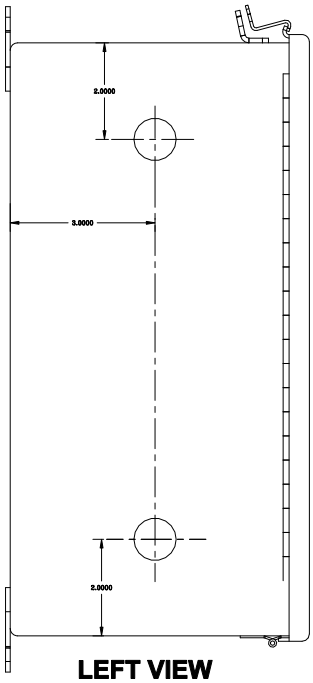

LEFT VIEW

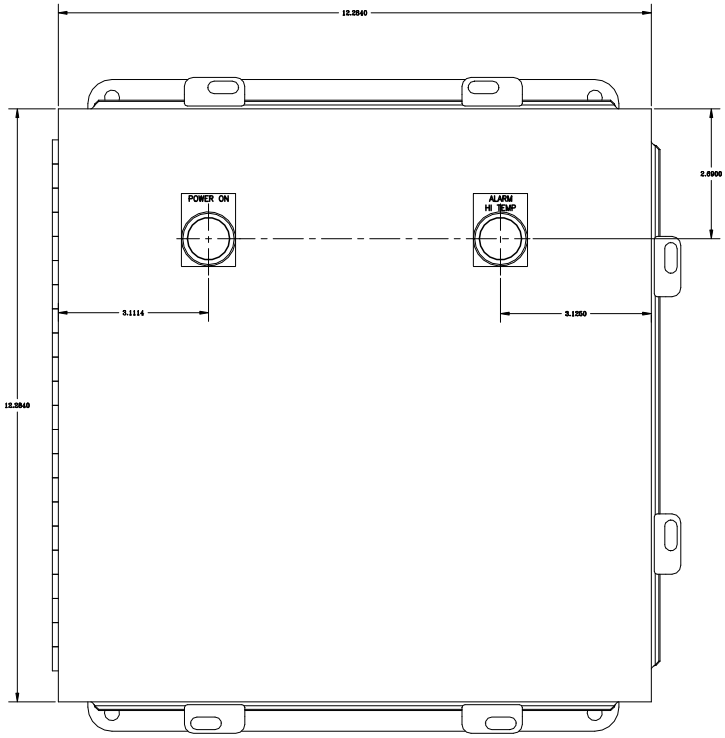

FRONT VIEW

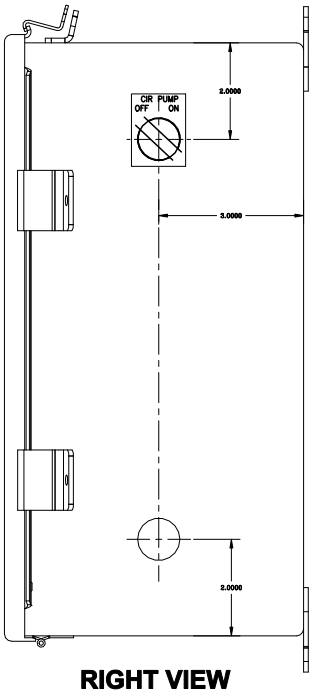

RIGHT VIEW

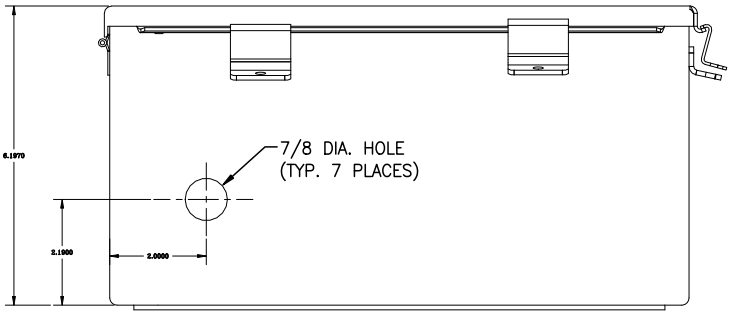

BOTTOM VIEW

LEGEND PLATES

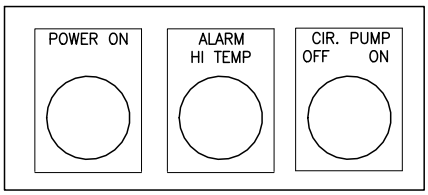

THERMAFLO ENGINEERING COMPANY Since 1986 — MANUFACTURERS of STEAM FIRED SPECIALTY EQUIPMENT			CHK'D BY: AS	TITLE: ThermaFlo Engineering Co.		
			DRAWN BY: MWB	SUB TITLE: Electrical Temp. & Pump Control Panel		
DO NOT SCALE DRAWING	FILE NAME: S04657-7.dwg	DATE ISSUED	SCALE	DRAWING NUMBER	REV	SHEET
	DRAWING TYPE: ELECTRICAL SCHEMATICS	06/06/2011	N.T.S.	S04657-7	0	7

CONTROL PANEL EXTERNAL CONNECTIONS

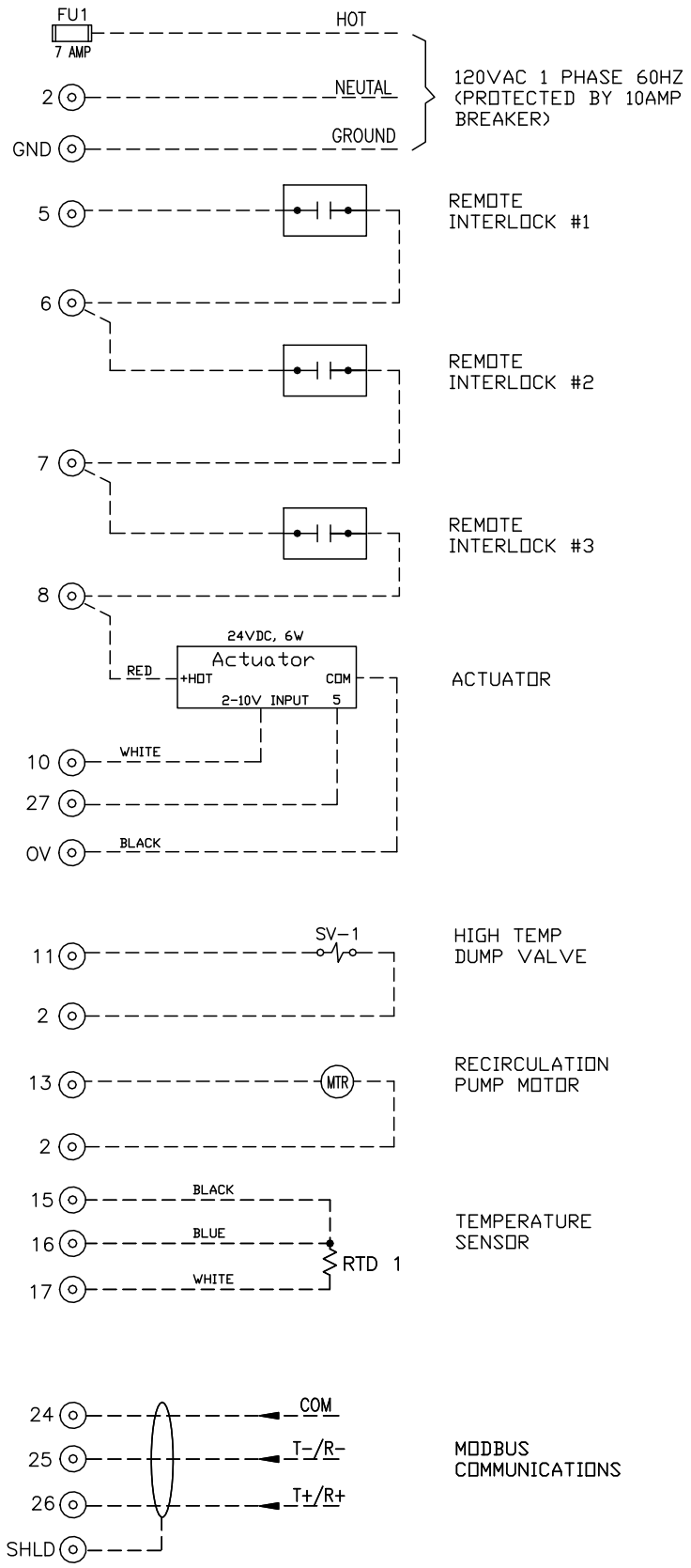

NOTE

⊙ CONTROL PANEL TERMINAL BLOCK SYMBOL

THERMAFLO ENGINEERING COMPANY Since 1986 — MANUFACTURERS of STEAM FIRED SPECIALTY EQUIPMENT			CHK'D BY: AS	TITLE: ThermaFlo Engineering Co.	
			DRAWN BY: MWB	SUBTITLE: Electrical Temp. & Pump Control Panel	
DO NOT SCALE DRAWING	FILE NAME: S04657-8.dwg	DATE ISSUED	SCALE	DRAWING NUMBER	REV / SHEET
	DRAWING TYPE: ELECTRICAL SCHEMATICS	06/06/2011	N.T.S.	S04657-8	0 / 8